563

# ADL200M ADL400M 系列外置互感器双回路电能表
# ADL200M ADL400M Series Dual-Circuit Electric Energy Meter With External Current Transformer

## 安装使用说明书 V1.1
## Installation and Operation Instructions

安科瑞电气股份有限公司

Acrel Electric Co., Ltd.

# 申明

# Statement

版权所有，未经本公司之书面许可，此手册中任何段落、章节内容均不得摘抄、拷贝或以任何形式复制、传播，否则一切后果由违者自负。

All rights reserved. Without the written permission of the Company, any paragraph or section of this manual shall not be extracted, copied or reproduced or distributed in any form. Otherwise, all consequences shall be borne by the violator.

本公司保留一切法律权利。

The Company reserves all legal rights.

本公司保留对本手册所描述之产品规格进行修改的权利，恕不另行通知。订货前，请垂询当地代理商以获悉本产品的当前规格。

Our Company reserves the right to modify the product specifications described in this manual without further notice. Please consult your local agent for the current specifications of this product before placing an order.

# 安全信息

# safe Information

这份手册并未包含操作设备（模块、设备）的所有安全措施，因为特殊的操作条件、当地的法规要求或规定可能需要采取进一步的措施。然而，它包含了一些必须阅读的信息，这些信息关系到您的人身安全和避免物质损害。这些信息通过一个警告三角形来强调，并根据潜在危险的程度如下表示。

This manual does not contain all of the safety measures for operation of the equipment(module, device),because special operating conditions, and local code requirements or regulations may necessitate further measures. However,it does contain information which must be read for your personal safety and to avoid material damages. This information is highlighted by a warning triangle and is represented as follows, depending on the degree of potential danger.

| DANGER |
| --- |
| “危险”表示一种危险的情况，如果不加以避免，将导致死亡或重伤。<br>不遵循这些说明将导致死亡或重伤。<br>DANGER indicates a hazardous situation which, if not avoided, will result indeath or serious injury.<br>Failure to follow these instructions will result in death or serious injury. |

| WARNING |
| --- |
| “警告”表示一种危险的情况，如果不加以避免，可能导致死亡或重伤。<br>WARNING indicates a hazardous situation which, if not avoided, could resultin death or serious injury. |

| CAUTION |
| --- |
| “小心”表示一种危险的情况，如果不加以避免，可能导致轻度或中度伤害。<br>CAUTlON indicates a hazardous situation which, if not avoided, could result inminor or moderate iniury. |

# 目 录

# Contents


1 概述 ..... 1
1 Overview ..... 1
2 型号说明 ..... 1
2 Description of Model ..... 1
3 功能列表 ..... 1
3 List of Functions ..... 1
4 技术参数 ..... 2
4 Technical Parameters ..... 2
5 外形尺寸 ..... 4
5 Overall Dimensions ..... 4
5.1 仪表尺寸（单位：mm） ..... 4
5.1 Instrument Dimensions（Unit:mm） ..... 4
5.2 互感器尺寸（单位：mm） ..... 5
5.2 Transducer Dimensions（Unit:mm） ..... 5
6 安全措施 ..... 5
6 safety measures ..... 5
7 接线与安装 ..... 6
7 Connection and Installation ..... 6
7.1 电压电流接线示意图 ..... 6
7.1 Schematic Diagram of Voltage and Current Connection ..... 6
7.2 通讯端子 ..... 8
7.2 Communication Terminal ..... 8
8 主要功能特点 ..... 8
8 Main Functional Features ..... 8
8.1 测量功能 ..... 8
8.1 Measurement Function ..... 8
8.2 计量功能 ..... 8
8.2 Metering Function ..... 8
9 指示灯与铭牌标志 ..... 8
9 Indicator light and nameplate sign ..... 8
9.1 指示灯说明 ..... 8
9.1 Indicator light description ..... 8
9.2 铭牌标志说明 ..... 9
9.2 Nameplate sign description ..... 9
10 通信说明 ..... 9
10 Communication Instructions ..... 9
10.1 地址表 ..... 10
10.1 Address Table ..... 10
11 常见故障分析 ..... 17
11 Common Fault Analysis ..... 17
11.1 电压电流功率异常 ..... 17
11.1 Abnormal Voltage, Current, and Power Indications ..... 17
11.2 通讯故障 ..... 18

11.2 Communication Fault ..... 18
12 运输与贮存 ..... 18
12 Transportation and Storage ..... 18
13.保修与服务 ..... 18
13. Warranty and Service ..... 18
14.维护与保养 ..... 18
14. Care and maintenance ..... 18

# 1 概述

# 1 Overview

ADL200M 400M 系列外置互感器双回路电能表，是主要针对于光伏并网系统、微逆系统、储能系统、交流耦合系统等新能源发电系统而设计的一款智能仪表，产品具有精度高、体积小、响应速度快、安装方便等优点。具有对电力参数进行采样计量和监测，逆变器或者能量管理系统（EMS）与之进行通讯，根据实时功率及累计电能实现防逆流、调节发电量、电池充放电等功能，可双向计量，实现户用分布式光伏能量管理。

ADL200M 400M series Dual-Circuit Electric Energy Meter With External Current Transformer is an intelligent instrument mainly designed for new energy power generation systems such as photovoltaic grid-connected system, micro inverter system, energy storage system, AC coupling system, etc. The product has the advantages of high precision, small volume, high respondent speed and convenient installation. The product has the features of sampling, metering and monitoring power parameters, communicating with an inverter or an energy management system (EMS), realizing the functions of preventing reverse flow, regulating power generation, charging and discharging batteries according to real-time power and accumulated electric energy, and realizing bidirectional metering and household distributed photovoltaic energy management.

# 2 型号说明

# 2 Description of Model

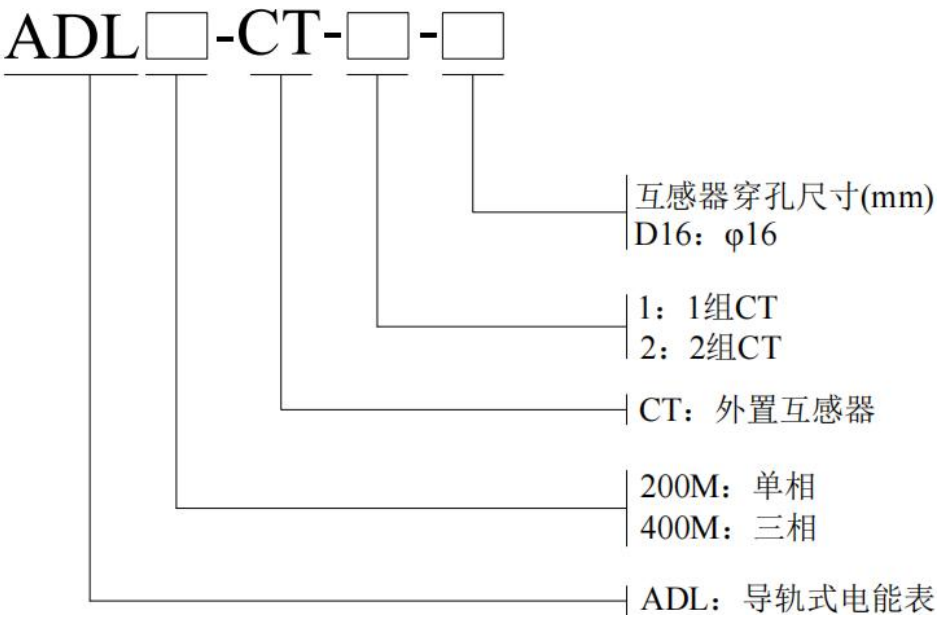


# 3 功能列表

# 3 List of Functions

表 1 功能说明列表

Table 1 List of Function Descriptions

| 功能<br>Function | 功能说明<br>Descriptions |
|---|---|

| | |
|---|---|
| 电能计量<br>Electric energy metering | 有功电能计量（正、反向）<br>Active energy metering (forward and reverse) |
| | 无功电能计量（正、反向）<br>Reactive energy metering (forward and reverse) |
| | 分相电能<br>Split-phase energy |
| 电量测量<br>Electric quantity measurement | U, I |
| | P, Q, S, PF, F |
| 通讯<br>Communication | RS485 接口，支持 Modbus RTU 规约<br>RS485：Modbus RTU |

# 4 技术参数

# 4 Technical Parameters

表 2 技术参数说明

Table 2 Description of Technical Parameters

| **项目**<br>**Item** | | | **性能参数**<br>**Performance Parameters** | |
|---|---|---|---|---|
| 型号系列<br>Model Series | | | ADL200M | ADL400M |
| 测量<br>Measurement | 网络<br>Grid | | 单相<br>Single-phase | 三相四线<br>Three-phase four-wire |
| | 电压<br>Voltage | 标称电压<br>(Unom)<br>Nominal voltage | 230V | 三相：3×230/400V<br>Three-phase:3×230/400V |
| | | 输入范围<br>Input Range | 0.8Unom ~ 1.2Unom | |
| | | 过负荷<br>Overload | 1.2 倍额定值（连续）<br>1.2 times rating (continuous)<br>2 倍额定值持续 1 秒<br>2 times the rating for 1 second | |
| | | 功耗<br>Power consumption | <2w, <10VA | |
| | | 精度等级<br>Accuracy class | 误差±0.5%<br>Error ±0.5% | |
| | 电流<br>Current | 最小电流<br>(Imin)<br>Minimum current | 0.3A | |
| | | 转折电流(Itr)<br>Transitional current | 1.5A | |
| | | 基本电流(Ib)<br>Basic current | 30A | |
| | | 最大电流<br>(Imax)<br>Maxinum current | D16：Imax = 120A | |

| | | | |
|---|---|---|---|
| | | 短时过流<br>Short-term overcurrent | 30 倍最大电流持续 20ms<br>30 times the maximum current for 20ms |
| | | 过负荷<br>Overload | 1.2 倍额定值（连续）<br>1.2 times rating (continuous)<br>2 倍额定值持续 1 秒<br>2 times the rating for 1 second |
| | | 功耗<br>Power consumption | <1W, <1VA |
| | | 精度等级<br>Accuracy class | 误差±0.5%<br>Error ±0.5% |
| | 功率<br>Power | | 有功、无功、视在功率，误差±0.5%<br>Active, reactive, apparent power, error ±0.5% |
| | 电网频率<br>Grid frequency | | 50Hz，误差±0.5%<br>50Hz, error ±0.5% |
| | 响应速率<br>Response rate | | 50ms（电压、电流、功率）<br>50ms (voltage, current, power) |
| | 安装类别<br>Installation category | | CAT III |
| | 过电压等级<br>overvoltage level | | OVC III |
| 计量<br>Metering | 有功电能<br>Active electric energy | | Class 1or B |
| 电磁兼容<br>electromagnetic compatibility | | | E2 |
| 安全性<br>Security | 工频耐压<br>Power frequency withstand voltage | | 通信与信号输入之间 AC3kV 1min<br>Between communication and signal input, AC3kV 1min |
| | 绝缘电阻<br>Insulation resistance | | 输入、输出端对机壳>100MΩ<br>Input and output terminals to casing >100MΩ |
| 通信<br>Communication | 接口与通信规约<br>Interface and communication protocol | | RS485 口、Modbus RTU 规约<br>RS485 interface and Modbus RTU protocol |
| | 通信地址范围<br>Communication address range | | Modbus RTU:1~ 247； |
| | 波特率<br>Baud rate | | 支持 1200bps-38400bps<br>Support 1200bps-38400bps |
| 环境<br>Environment | 规定工作温度<br>Operating temperature range | | -25℃～+55℃ |
| | 极限工作温度<br>Operating temperature range | | -40℃～+70℃ |
| | 储存温度<br>Storage temperature | | -40℃～+85℃ |
| | 相对湿度<br>Relative humidity | | ≤95%（无凝露）<br>≤95% (without condensation)<br>不适用潮湿环境<br>"Not suitable for damp environments" |
| | 海拔高度<br>Altitude | | ≤2000m |
| IP 等级 | | | 正面：IP51；整体：IP20。 |

| | |
|---|---|
| IP rating | IP20 on terminal strip without protective housing and IP51 in protective housing, per IEC 60529 |
| 污染等级<br>Pollution Degree | II |
| UC 等级<br>UC Degree | III |
| 安装环境<br>Installation environment | 室内<br>Indoor use |
| 保护等级<br>Protect Degree | II（双重绝缘）<br>Class II (Double Insulation) |
| 使用环境<br>usage environment | 柜内安装(外壳不可触及)<br>Cabinet mounted(The outer shell cannot be touched) |
| 机械等级<br>usage environment | M1 |
| 互感器安全特性<br>Transformer Safety characteristics | 绝缘电阻：常态时大于 1000MΩ；<br>Insulation resistance: greater than 1000 MΩ under normal conditions；<br>抗电强度：可承受工频 4000V 50Hz/1 分钟；<br>Electric strength resistance: It can withstand 4000V, 50Hz power frequency for 1 minute；<br>阻燃性：符合 UL94-Vo 级<br>Flame retardancy: Conforms to UL94-V0 level； |
| 参考标准<br>reference standard | EN IEC 61010-1:2010 Safety requirements for electrical equipment for measurement, control, and laboratory use - Part 1: General requirements<br><br>EN IEC 61010-2-030:2010 Safety requirements for electrical equipment for measurement, control, and laboratory use - Part 2-030: Particular requirements for equipment having testing or measuring circuits<br><br>EN IEC 61326-1:2021 Electrical equipment for measurement, control, and laboratory use - EMC requirements - Part 1: General requirements<br><br>EN IEC 61326-2-1:2021 Electrical equipment for measurement, control, and laboratory use - EMC requirements - Part 2-1: Particular requirements for electromagnetic compatibility testing for electrical equipment for measurement, control, and laboratory use<br><br>EN 50470-3 Electricity metering equipment (a.c.) - Part 3: Particular requirements - Static meters for active energy (class indexes A, B and C) |

# 5 外形尺寸

# 5 Overall Dimensions

## 5.1 仪表尺寸（单位：mm）
## 5.1 Instrument Dimensions（Unit:mm）

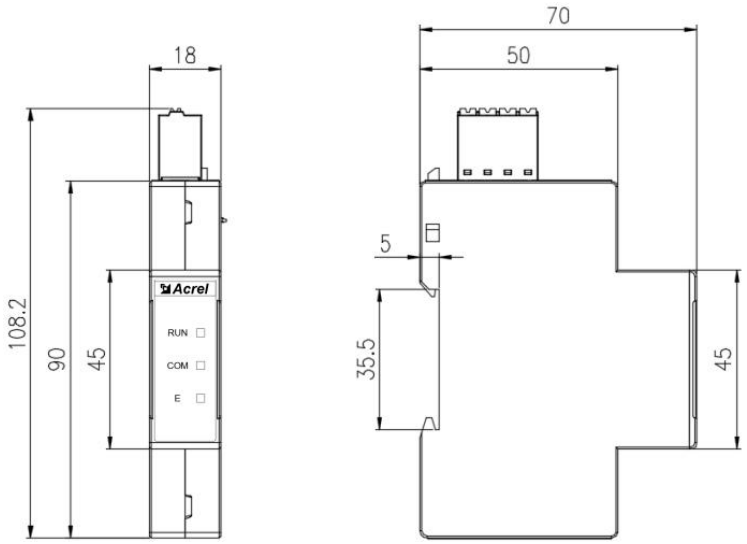


注：尺寸的公差为 1mm。

Note: The tolerance of the dimensions is 1mm..

### 5.2 互感器尺寸（单位：mm）

### 5.2 Transducer Dimensions（Unit:mm）

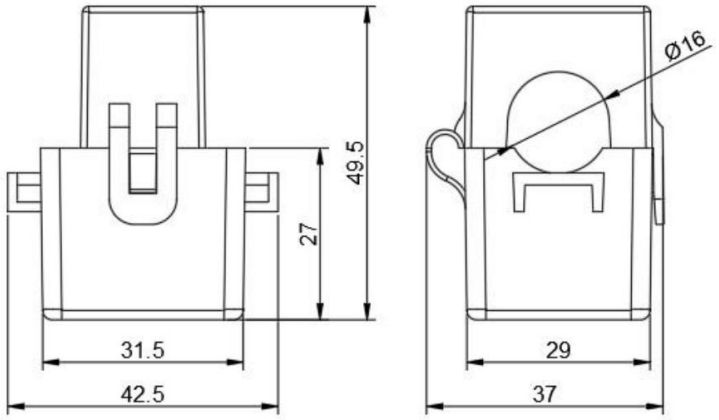


注：

Note:

- 互感器引线段中黄色接 A 相，绿色接 B 相，红色接 C 相。

Note: In the lead wire section of the current transformer, the yellow wire is connected to Phase A, the green wire is connected to Phase B, and the red wire is connected to Phase C.

- 尺寸的公差为 1mm。

The tolerance of the dimensions is 1mm..

## 6 安全措施

## 6 safety measures

电击、爆炸以及弧光的危险

HAZARD OF ELECTRIC SHOCK, EXPLOSION, OR ARC FLASH

•请穿戴好人员保护设备 (PPE)，并遵守电气操作安全规程。
• Apply appropriate personal protective equipment (PPE) and follow safe electrical work practices.

• 本产品在使用前不需要试运行。
• This equipment does not not require commission before use.

• 开始在本设备上工作之前，请先关闭本设备及安装有本设备的设备的所有电源。
• Turn off all power supplying this device and the equipment in which it is installed before working on it.

• 务必使用额定电压值正确的电压感应设备，以确认所有电源均已关闭。
• Always use a properly rated voltage sensing device to confirm that all power is off.

• 切勿超过设备的最高限值。
• Do not exceed the device's ratings for maximum limits.

• 某些关键控制或保护应用中的人身或设备安全依赖于控制电路运行，请勿将此设备用 于此等目的。
• Do not use this device for critical control or protection applications where human or equipment safety relies on the operation of the control circuit.

• 请勿使用水或任何液体材料清洁产品。使用清洁布清除污垢。
• Do not use water or any liquid material to clean the product. Use a cleaning cloth to remove dirt.
• 安装人员负责协调电源侧过流保护装置的额定值和特性与最大额定电流。 若违反这些指令将导致死亡或严重伤害。
• The installer is responsible for co-ordinating the rating and the characteristics of the supply side overcurrent protection devices with the maximum current rating.Failure to follow these instructions will result in death or serious injury.

• 这是安全警示标志，提醒注意潜在的人身伤害危险。当看到此标志时需查阅使用手册。

•This is the safety alert symbol. It is used to alert you to potential personal injury hazards. When seeing this symbol, it is necessary to consult the manual.
• 如果设备未按制造商规定的方式使用，则设备提供的保护可能会受损。
• If the equipment is used in a manner not specified by the manufacturer, the protection provided by the equipment may be impaired.
• Do not exceed the device's ratings for maximum limits.

# 7 接线与安装

# 7 Connection and Installation

## 7.1 电压电流接线示意图
## 7.1 Schematic Diagram of Voltage and Current Connection

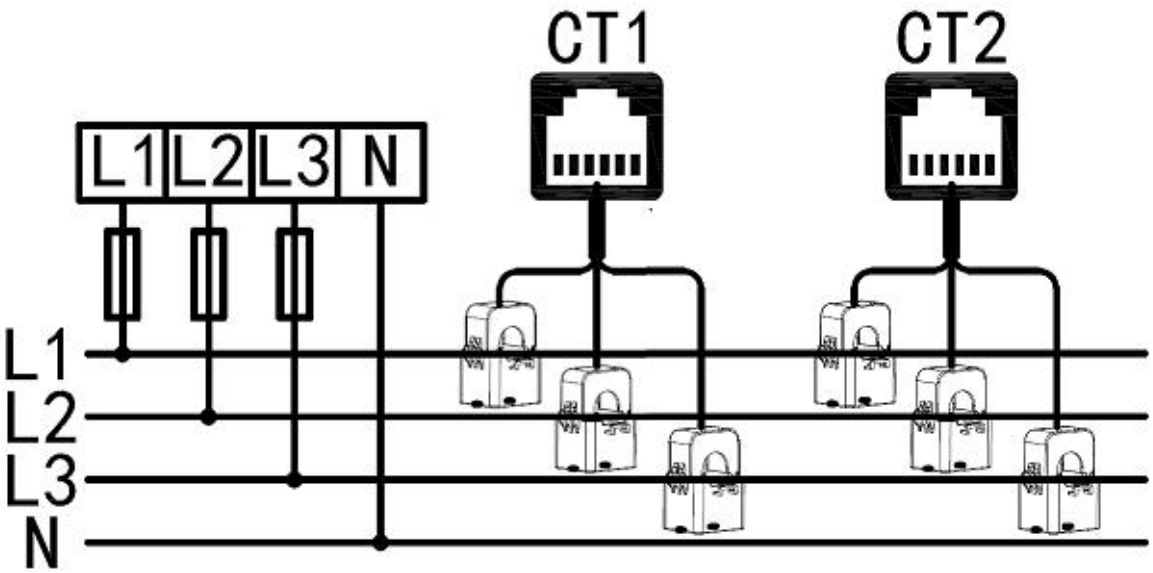


注：

Note:

- ADL200M 只需要接 A 相;
  Only connect Phase A toADL200M;
- ADL□-CT-1-□只需要接 CT1;
  Only need connect CT1 to ADL□-CT-1-□;
- 出于安全考虑，在电压输入端需接入额定电流 5A 的保险丝；
  For safty reasons,a fuse with a rated current of 5A needs to be connected to the voltage input terminal;
- 接线之前确保设备处于断电状态；
  Verify that power is OFF before making connections;
- ADL200M 的每组 CT 仅有一相的互感器，ADL400M 的每组 CT 有 3 相的互感器。
  Each group of CT in ADL200M has only one phase of transformer, while each group of CT in ADL200M has three phases of transformer.

## 警告

- 使用额定电压 500V 的铜线
- 连接到现场接线端子的电缆的最低承受温度为 80°C

**不遵守以上说明肯能会导致死亡、严重伤害和设备损坏**

## WARNING

- Use copper wire rated for 500V.
- Minimum temperature rating of the cable to be connected to the field wiring terminals, 80 °C.

**Failure to follow these instructions can result in death, serious injury, or equipment damage.**

## AVERTISSEMENT

- Utilisez un fil de cuivre évalué pour 500V.
- Température nominale minimale du câble à connecter aux bornes de câblage sur le terrain, 80 °C.

**Le non-respect de ces instructions peut entraîner la mort, des blessures graves ou des dommages à l'équipement.**

### 7.2 通讯端子
### 7.2 Communication Terminal

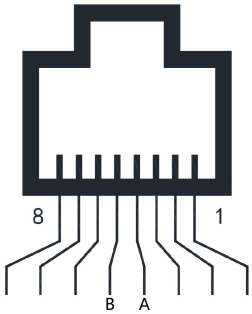


RS485

## 8 主要功能特点

## 8 Main Functional Features

### 8.1 测量功能
### 8.1 Measurement Function

仪表能测量全电力参数包括电压 U、电流 I、有功功率 P、无功功率 Q、视在功率 S、功率因数 PF、频率、正向有功电能，反向有功电能，正向无功电能，反向无功电能。

It can measure total power parameters including voltage U, current I, active power P, reactive power Q, apparent power S, power factor PF, frequency, forward active electric energy, reverse active electric energy, forward reactive electric energy and reverse reactive electric energy.

### 8.2 计量功能
### 8.2 Metering Function

能计量当前组合有功电能，正向有功电能，反向有功电能，正向无功电能，反向无功电能。

It can measure the current combined active electric energy, forward active electric energy, reverse active electric energy, forward reactive electric energy and reverse reactive electric energy.

## 9 指示灯与铭牌标志

## 9 Indicator light and nameplate sign

### 9.1 指示灯说明
### 9.1 Indicator light description

| 指示灯名称<br>Indicator name | 说明<br>illustrate |
|---|---|
| RUN | 运行指示灯，正常运行时按 1HZ 频率闪烁<br>Operation indicator light flashes at 1HZ frequency during normal operation |

| | |
|---|---|
| COM | 正常通讯时闪烁<br>Flashes during normal communication |
| E | 脉冲指示灯，如脉冲常数是 600 时，每个脉冲表示 1/600kwh 电量<br>Pulse indicator light, if the pulse constant is 600, each pulse represents 1/600kwh of electricity<br>脉冲指示灯为红绿双色灯珠，绿色代表第一路，红色代表第二路<br>The pulse indicator light is red and green two-color light beads, green represents the first road, red represents the second road |

**9.2 铭牌标志说明**

**9.2 Nameplate sign description**

| 铭牌标志<br>**Nameplate sign** | 说明<br>illustrate |
|---|---|
| | 有功电能精度等级为 B 级<br>The accuracy of active energy is class B |
| 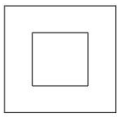 | 双重绝缘<br>Double insulation |
| | 安全警示标志<br>Safety warning sign |
| | 双向计量<br>Bidirectional measurement |
| | 单测量单元有功电能表<br>Single measuring unit active power meter |
| 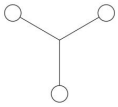 | 三测量单元有功电能表<br>Three measuring unit active power meter |

# 10 通信说明

# 10 Communication Instructions

仪表RS485通信接口支持MODBUS-RTU通信协议，通信口波特率可在1200bps、2400 bps、4800 bps、9600bps、19200 bps 和 38400 bps 之间设置，校验位为无校验。

The instrument RS485 communication interface supports MODBUS-RTU communication protocol. The baud rate of communication interface can be set between 1,200bps, 2,400 bps, 4,800 bps, 9,600bps, 19,200 bps and 38,400 bps, and the check bit is no check.

仪表的 RS485 通信口要求使用屏蔽双绞线连接，布线时要考虑整个网络的布局：如通信线缆的长度、走向、上位机的位置、网络末端的匹配电阻、通信转换器、网络可扩展性、网络覆盖范围、环境的电磁干扰情况等因素，都要综合考虑。

The RS485 communication interface of the instrument requires shielded twisted pair connection, and the layout of the

whole grid should be considered when wiring: For example, the length and direction of communication cable, the position of upper computer, the matching resistance at the end of the grid, the communication converter, the scalability of the grid, the coverage of the grid, the electromagnetic interference of the environment and other factors should be considered comprehensively.

注：

Note:

1、在布线工程上要严格按要求施工；

1. It shall strictly construct according to the requirements in the wiring project;

2、对于暂时不需要通信的仪表都要将他们连接到 RS-485 网络上，以便于诊断和测试；

2. For instruments that do not need communication temporarily, they should be connected to RS-485 grid for diagnosis and test;

3、进行 RS-485 电缆连接时，尽量使用双色双绞线，所有的 485 通信口“A”端接同一种颜色，“B”端接另一种颜色。

3. When connecting RS-485 cable, try to use two-color twisted pair. All 485 communication ports "A" are terminated in the same color, and "B" is terminated in another color.

4、RS-485 总线(从上位机通信口开始到任一被连接的仪表终端通信口)长不超过 1000 米。

4. The length of RS-485 bus (from the communication interface of the upper computer to any connected instrument terminal communication interface) shall not exceed 1,000 meters.

## 10.1 地址表

## 10.1 Address Table

仪表支持 MODBUS-RTU 协议中的 03H 命令与 10H 命令，03H 为读多个寄存器，10H 为写多个寄存器，协议数据格式请自行查询。下表为仪表的寄存器地址表：

Meter supports 03H command and 10H command in MODBUS-RTU protocol, in which 03H for reading multiple registers and 10H for writing multiple registers. Please check the protocol data format by yourself. The following table is the register address table of the meter:

表 8 通讯地址表

Table 8 Communication Address Table

| 地址 Address | 名称 Name | R/W | 字长 World Length | 类型 Type | 单位 Unit | 备注 Note |
|---|---|---|---|---|---|---|
| 0000H | 地址 slave address | R/W | 1 | uint16 | | 1-247 |
| 000BH | 特征码 feature code | R | 1 | uint16 | | 高字节固定为 0xAC<br>低字节表示电表类型，如下：<br>0x01：单路 CT-单相电表；<br>0x02：单路 CT-三相电表；<br>0x03：双路 CT-单相电表：<br>0x04：双路 CT-三相电表：<br><br>The high byte is fixed as 0xAC. The low byte represents the type of electric meter, as follows:<br>0x01: Single-channel CT - Single-phase electric meter;<br>0x02: Single-channel CT - Three-phase electric meter; |

| | | | | | | |
|---|---|---|---|---|---|---|
| | | | | | | 0x03: Dual-channel CT - Single-phase electric meter;<br>0x04: Dual-channel CT - Three-phase electric meter. |
| 000CH | 第一路相序检测结果<br>the phase - sequence detection result of the first channel | R | 1 | uint16 | | 高八位（互感器极性）：<br>the upper 8-bits (polarity of the mutual inductor)<br>bit8:A 相 Phase A<br>bit9:B 相 Phase B<br>bit10:C 相 Phase C<br>为 1 表示极性相反<br>1 indicates that the polarity is reversed<br>低八位（相序）：<br>the lower 8-bits (Phase sequence):<br>0：ABC<br>1：BAC<br>2：ACB<br>3：CBA<br>4：CAB<br>5：BCA |
| 000DH | 第一路相序调整<br>phase sequence adjustment of the first channel. | R/W | 1 | uint16 | | 0：ABC<br>1：BAC<br>2：ACB<br>3：CBA<br>4：CAB<br>5：BCA |
| 000EH | 第一路互感器极性调整<br>polarity adjustment of the current transformer of the first channel | R/W | 1 | uint16 | | bit0:A 相 Phase A<br>Bit1:B 相 Phase B<br>Bit2:C 相 Phase C |
| 000FH | 第二路相序检测结果<br>the phase - sequence detection result of the second channel | R | 1 | uint16 | | 高八位（互感器极性）：<br>the upper 8-bits (polarity of the mutual inductor)<br>bit8:A 相 Phase A<br>bit9:B 相 Phase B<br>bit10:C 相 Phase C<br>为 1 表示极性相反<br>1 indicates that the polarity is reversed<br>低八位（相序）：<br>the lower 8-bits (Phase sequence):<br>0：ABC<br>1：BAC<br>2：ACB |

| | | | | | | |
|---|---|---|---|---|---|---|
| | | | | | | 3：CBA<br>4：CAB<br>5：BCA |
| 0010H | 第二路相序调整<br>phase sequence adjustment of the second channel | R/W | 1 | uint16 | | 0：ABC<br>1：BAC<br>2：ACB<br>3：CBA<br>4：CAB<br>5：BCA |
| 0011H | 第二路互感器极性调整<br>polarity adjustment of the current transformer of the second channel | R/W | 1 | uint16 | | bit0:A 相 Phase A<br>Bit1:B 相 Phase B<br>Bit2:C 相 Phase C |
| 1000H | 地址 slave address | R/W | 1 | uint16 | | 1-247 |
| 1001H | 波特率<br>baud rate | R/W | 1 | uint16 | | 1200，2400，4800，9600，19200，38400， |
| 1002H | 校验位<br>parity | R/W | 1 | uint16 | | 低字节 lower byte<br>0：无校验 None<br>1：奇校验 Odd<br>2：偶校验 Even<br>高字节 higher byte<br>0：1 停止位 1stop<br>1：2 停止位 2stop |
| 1009H | 序列号 SnNum | R/W | 7 | uint16 | | ASCII |
| 2100H | A 相电压 A-phase voltage | R | 2 | float | V | 第一路电参量数据<br>The electrical parameter data of the first circuit |
| 2102H | B 相电压 B-phase voltage | R | 2 | float | V | |
| 2104H | C 相电压 C-phase voltage | R | 2 | float | V | |
| 2106H | AB 线电压 AB-line voltage | R | 2 | float | V | |
| 2108H | BC 线电压 BC-line voltage | R | 2 | float | V | |
| 210AH | CA 线电压 CA-line voltage | R | 2 | float | V | |
| 210CH | A 相电流 A-phase current | R | 2 | float | A | |
| 210EH | B 相电流 B-phase current | R | 2 | float | A | |
| 2110H | C 相电流 C-phase current | R | 2 | float | A | |
| 2112H | N 线电流 N-phase current | R | 2 | float | A | |
| 2114H | A 相有功功率<br>A-phase active power | R | 2 | float | W | |
| 2116H | B 相有功功率<br>B-phase active power | R | 2 | float | W | |
| 2118H | C 相有功功率<br>C-phase active power | R | 2 | float | W | |
| 211AH | 总有功功率 Total active power | R | 2 | float | W | |
| 211CH | A 相无功功率 | R | 2 | float | Var | |

| | | | | | | |
|---|---|---|---|---|---|---|
| | A-phase reactive power | | | | | |
| 211EH | B 相无功功率<br>B-phase reactive power | R | 2 | float | Var | |
| 2120H | C 相无功功率<br>C-phase reactive power | R | 2 | float | Var | |
| 2122H | 总无功功率 total reactive power | R | 2 | float | Var | |
| 2124H | A 相视在功率<br>A-phase apparent power | R | 2 | float | VA | |
| 2126H | B 相视在功率<br>B-phase apparent power | R | 2 | float | VA | |
| 2128H | C 相视在功率<br>C-phase apparent power | R | 2 | float | VA | |
| 212AH | 总视在功率 Total apparent power | R | 2 | float | VA | |
| 212CH | A 相功率因数<br>A-phase power factor | R | 2 | float | | |
| 212EH | B 相功率因数<br>B-phase power factor | R | 2 | float | | |
| 2130H | C 相功率因数<br>C-phase power factor | R | 2 | float | | |
| 2132H | 总功率因数 Total power factor | R | 2 | float | | |
| 2134H | 频率 Frequency | R | 2 | float | Hz | |
| 2300H | A 相电压 A-phase voltage | R | 2 | float | V | 第二路电参量数据<br>The electrical parameter data of the second circuit |
| 2302H | B 相电压 B-phase voltage | R | 2 | float | V | |
| 2304H | C 相电压 C-phase voltage | R | 2 | float | V | |
| 2306H | AB 线电压 AB-line voltage | R | 2 | float | V | |
| 2308H | BC 线电压 BC-line voltage | R | 2 | float | V | |
| 230AH | CA 线电压 CA-line voltage | R | 2 | float | V | |
| 230CH | A 相电流 A-phase current | R | 2 | float | A | |
| 230EH | B 相电流 B-phase current | R | 2 | float | A | |
| 2310H | C 相电流 C-phase current | R | 2 | float | A | |
| 2312H | N 线电流 N-phase current | R | 2 | float | A | |
| 2314H | A 相有功功率<br>A-phase active power | R | 2 | float | W | |
| 2316H | B 相有功功率<br>B-phase active power | R | 2 | float | W | |
| 2318H | C 相有功功率<br>C-phase active power | R | 2 | float | W | |
| 231AH | 总有功功率 Total active power | R | 2 | float | W | |

| | | | | | | |
|---|---|---|---|---|---|---|
| 231CH | A 相无功功率<br>A-phase reactive power | R | 2 | float | Var | |
| 231EH | B 相无功功率<br>B-phase reactive power | R | 2 | float | Var | |
| 2320H | C 相无功功率<br>C-phase reactive power | R | 2 | float | Var | |
| 2322H | 总无功功率 total reactive power | R | 2 | float | Var | |
| 2324H | A 相视在功率<br>A-phase apparent power | R | 2 | float | VA | |
| 2326H | B 相视在功率<br>B-phase apparent power | R | 2 | float | VA | |
| 2328H | C 相视在功率<br>C-phase apparent power | R | 2 | float | VA | |
| 232AH | 总视在功率 Total apparent power | R | 2 | float | VA | |
| 232CH | A 相功率因数<br>A-phase power factor | R | 2 | float | | |
| 232EH | B 相功率因数<br>B-phase power factor | R | 2 | float | | |
| 2330H | C 相功率因数<br>C-phase power factor | R | 2 | float | | |
| 2332H | 总功率因数 Total power factor | R | 2 | float | | |
| 2334H | 频率 Frequency | R | 2 | float | Hz | |
| 3000H | 总有功电能一次值<br>active electric energy | R | 4 | double | kWh | 第一路电能<br>The first circuit electrical energy |
| 3004H | 正向有功电能一次值<br>forward active electric energy | R | 4 | double | kWh | |
| 3008H | 反向电能一次值<br>reverse active electric energy | R | 4 | double | kWh | |
| 300CH | 总无功电能一次值<br>reactive electric energy | R | 4 | double | kVarh | |
| 3010H | 正向无功电能一次值<br>forward reactive electric energy | R | 4 | double | kVarh | |
| 3014H | 反向无功电能一次值<br>reverse reactive electric energy | R | 4 | double | kVarh | |
| 3018H | 视在电能一次值<br>apparent electric energy | R | 4 | double | kVAh | |
| 301CH | A 相总有功电能一次值<br>active electric energy of phase A | R | 4 | double | kWh | |

| | | | | | | |
|---|---|---|---|---|---|---|
| 3020H | A 相正向有功电能一次值 forward active electric energy of phase A | R | 4 | double | kWh | |
| 3024H | A 相反向有功电能一次值 reverse active electric energy of phase A | R | 4 | double | kWh | |
| 3028H | A 相无功电能一次值 reactive electric energy of phase A | R | 4 | double | kVarh | |
| 302CH | A 相正向无功电能一次值 forward reactive electric energy of phase A | R | 4 | double | kVarh | |
| 3030H | A 相反向无功电能一次值 reverse reactive electric energy of phase A | R | 4 | double | kVarh | |
| 3034H | B 相总有功电能一次值 active electric energy of phase B | R | 4 | double | kWh | |
| 3038H | B 相正向有功电能一次值 forward active electric energy of phase B | R | 4 | double | kWh | |
| 303CH | B 相反向有功电能一次值 reverse active electric energy of phase B | R | 4 | double | kWh | |
| 3040H | B 相无功电能一次值 reactive electric energy of phase B | R | 4 | double | kVarh | |
| 3044H | B 相正向无功电能一次值 forward reactive electric energy of phase B | R | 4 | double | kVarh | |
| 3048H | B 相反向无功电能一次值 reverse reactive electric energy of phase B | R | 4 | double | kVarh | |
| 304CH | C 相总有功电能一次值 active electric energy of phase C | R | 4 | double | kWh | |
| 3050H | C 相正向有功电能一次值 forward active electric energy of phase C | R | 4 | double | kWh | |
| 3054H | C 相反向有功电能一次值 reverse active electric energy of phase C | R | 4 | double | kWh | |

| | | | | | | |
|---|---|---|---|---|---|---|
| 3058H | C 相无功电能一次值<br>reactive electric energy of phase C | R | 4 | double | kVarh | |
| 305CH | C 相正向无功电能一次值<br>forward reactive electric energy of phase C | R | 4 | double | kVarh | |
| 3060H | C 相反向无功电能一次值<br>reverse reactive electric energy of phase C | R | 4 | double | kVarh | |
| 3100H | 总有功电能一次值<br>active electric energy | R | 4 | double | kWh | 第二路电能<br>The second circuit electrical energy |
| 3104H | 正向有功电能一次值<br>forward active electric energy | R | 4 | double | kWh | |
| 3108H | 反向电能一次值<br>reverse active electric energy | R | 4 | double | kWh | |
| 310CH | 总无功电能一次值<br>reactive electric energy | R | 4 | double | kVarh | |
| 3110H | 正向无功电能一次值<br>forward reactive electric energy | R | 4 | double | kVarh | |
| 3114H | 反向无功电能一次值<br>reverse reactive electric energy | R | 4 | double | kVarh | |
| 3018H | 视在电能一次值<br>apparent electric energy | R | 4 | double | kVAh | |
| 311CH | A 相总有功电能一次值<br>active electric energy of phase A | R | 4 | double | kWh | |
| 3120H | A 相正向有功电能一次值<br>forward active electric energy of phase A | R | 4 | double | kWh | |
| 3124H | A 相反向有功电能一次值<br>reverse active electric energy of phase A | R | 4 | double | kWh | |
| 3128H | A 相无功电能一次值<br>reactive electric energy of phase A | R | 4 | double | kVarh | |
| 312CH | A 相正向无功电能一次值<br>forward reactive electric energy of phase A | R | 4 | double | kVarh | |
| 3130H | A 相反向无功电能一次值<br>reverse reactive electric energy of phase A | R | 4 | double | kVarh | |
| 3134H | B 相总有功电能一次值 | R | 4 | double | kWh | |

| | | | | | | |
|---|---|---|---|---|---|---|
| | active electric energy of phase B | | | | | |
| 3138H | B 相正向有功电能一次值 forward active electric energy of phase B | R | 4 | double | kWh | |
| 313CH | B 相反向有功电能一次值 reverse active electric energy of phase B | R | 4 | double | kWh | |
| 3140H | B 相无功电能一次值 reactive electric energy of phase B | R | 4 | double | kVarh | |
| 3144H | B 相正向无功电能一次值 forward reactive electric energy of phase B | R | 4 | double | kVarh | |
| 3148H | B 相反向无功电能一次值 reverse reactive electric energy of phase B | R | 4 | double | kVarh | |
| 314CH | C 相总有功电能一次值 active electric energy of phase C | R | 4 | double | kWh | |
| 3150H | C 相正向有功电能一次值 forward active electric energy of phase C | R | 4 | double | kWh | |
| 3154H | C 相反向有功电能一次值 reverse active electric energy of phase C | R | 4 | double | kWh | |
| 3158H | C 相无功电能一次值 reactive electric energy of phase C | R | 4 | double | kVarh | |
| 315CH | C 相正向无功电能一次值 forward reactive electric energy of phase C | R | 4 | double | kVarh | |
| 3160H | C 相反向无功电能一次值 reverse reactive electric energy of phase C | R | 4 | double | kVarh | |

# 11 常见故障分析

# 11 Common Fault Analysis

## 11.1 电压电流功率异常

## 11.1 Abnormal Voltage, Current, and Power Indications

(1)检查：实际接线与接线图的要求是否相同，注意电压线序是否正确，电流互感器的套线方向和相序是否正确；

(1) Inspection: Check whether the actual wiring is the same as the requirements of the wiring diagram, pay attention to whether the voltage wiring order is correct, and whether the direction of the current transformer's secondary winding and phase sequence are correct.

(2)测量：若接线没有问题，采用万用表通断测试档对产生问题所相关的外部线路接线进行测量，查看外部线路的端子与仪表端子之间是否导通。

(2) Measurement: If the wiring is correct, use a multimeter in continuity test mode to measure the external circuit connections related to the problem. Check for continuity between the terminals of the external circuit and the instrument terminals.

注意：在查看电流和电压线路时，一定要确保信号电流和电压处于断开状态，保证人身安全。

Note: When inspecting current and voltage circuits, ensure that the signal current and voltage are disconnected to ensure personal safety.

### 11.2 通讯故障
### 11.2 Communication Fault

(1)检查：检查通讯接线是否正确，A、B 是否接反。

(1) Check if the communication wiring is correct and if A and B are connected incorrectly.

## 12 运输与贮存

## 12 Transportation and Storage

仪表的包装宜采用符合环保要求的材料，仪表及附件在包装条件下应贮存在通风干燥处，避免受潮和腐蚀气体的浸蚀, 贮存的极限环境温度为-40℃～+80℃，相对湿度不超过 75%。

The packaging of the instrument should use environmentally friendly materials. The instrument and its accessories, when packaged, should be stored in a ventilated and dry place to avoid moisture and corrosion by gases. The storage temperature should be between -40°C and +80°C, with a relative humidity not exceeding 75%.

## 13.保修与服务

## 13. Warranty and Service

制造厂对产品质量实行三包，仪表自出厂之日起 24 个月内，用户在完全遵守本说明书的规定的使用条件下，使用时发现仪表损坏，由本公司负责免费修理或更换。

The manufacturer offers a triple guarantee on product quality. Within 24 months from the date of manufacture, if the user fully complies with the usage conditions specified in this manual and finds the instrument damaged during use, our company will be responsible for repairing or replacing it free of charge.

## 14.维护与保养

## 14. Care and maintenance

本电表不需要定期维护保养。

This meter does not require regular maintenance.

**附录：版本变更日志**

| 变更时间 | 版本号 | 变更内容 |
| --- | --- | --- |
| 2025.05.20 | V1.0 | 1、初版。 |
| 2025.08.18 | V1.1 | 1、仪表型号变更；<br>2、电流规格、温度范围及 IP 等级等技术参数描述变更。 |